# WALL-MOUNT 915 MHz MICROWAVE SURVEYMETER
# Ref. DFM L24DC

The microwave survey meter DFM L24DC 915 MHz is a system designed to measure and alarm if microwave leakage is detected in the immediate vicinity of a microwave system (industrial microwave oven, laboratory & industrial installations). The DFM L24DC is to be fixed on a wall, up to 20 m from the system to be surveyed.

To adjust its sensitivity of detection, the DFM must be positioned in the vicinity of the equipment to be surveyed on which, a microwave leakage of 2.3 mW/cm$^2$ has to be produced. After the adjustment of the sensitivity, if a leakage higher than 2.3 mW/cm$^2$ is detected, the DFM will alert by light and sound; also, the DFM can be used as an interlock which will stop the microwave transmission (if contact linked). The reset of the DFM can be done via its own reset button or by cutting the power off.

! **Obs**. The DFM L24DC is a microwave survey meter; for leakage metering please use a 915 MHz microwave leakage meter.

## Technical specification

| REF | DFM L24DC |
|---|---|
| Frequency | 915 MHz (integral band filter from 902 to 928 MHz)<br>896 MHz available on request |
| Detection distance | Adjustable for a microwave leakage of 2.3 mW/cm² at distance up to 20 m; delivery preset 2.3 mW/cm$^2$ at 5 m<br>CE Directive 2004-40 states max. microwave leakage level of 23 W/m$^2$, i.e. 2.3 mW/cm$^2$ |
| Mains | 24 VDC, consumption 2 mA in stand-by mode, 50 mA in detection mode |
| Connectors | M12A, female 5 pins, for M12 standard cables, 10 m standard length (20 m optional)<br>2 terminals for 24 VDC, 3 terminals to contact alarm |
| Contacts | 1 inverter, power cut-off 1 A at 24 VDC |
| Dimensions | 160 mm x 110 mm x 62 mm, weight 350 g |
| Wall fixing | Base to fix on the wall with 2 screws (not provided); upper block mounts on the base through bayonet-type system - see drawing. |

**12 porte du Grand Lyon, 01702 Neyron Cedex, France, www.sairem.com**
**☎ : +33 (0)4 72 01 81 60, 🖷 : +33 (0)4 72 01 81 79 E-mail : commercial@sairem.com**

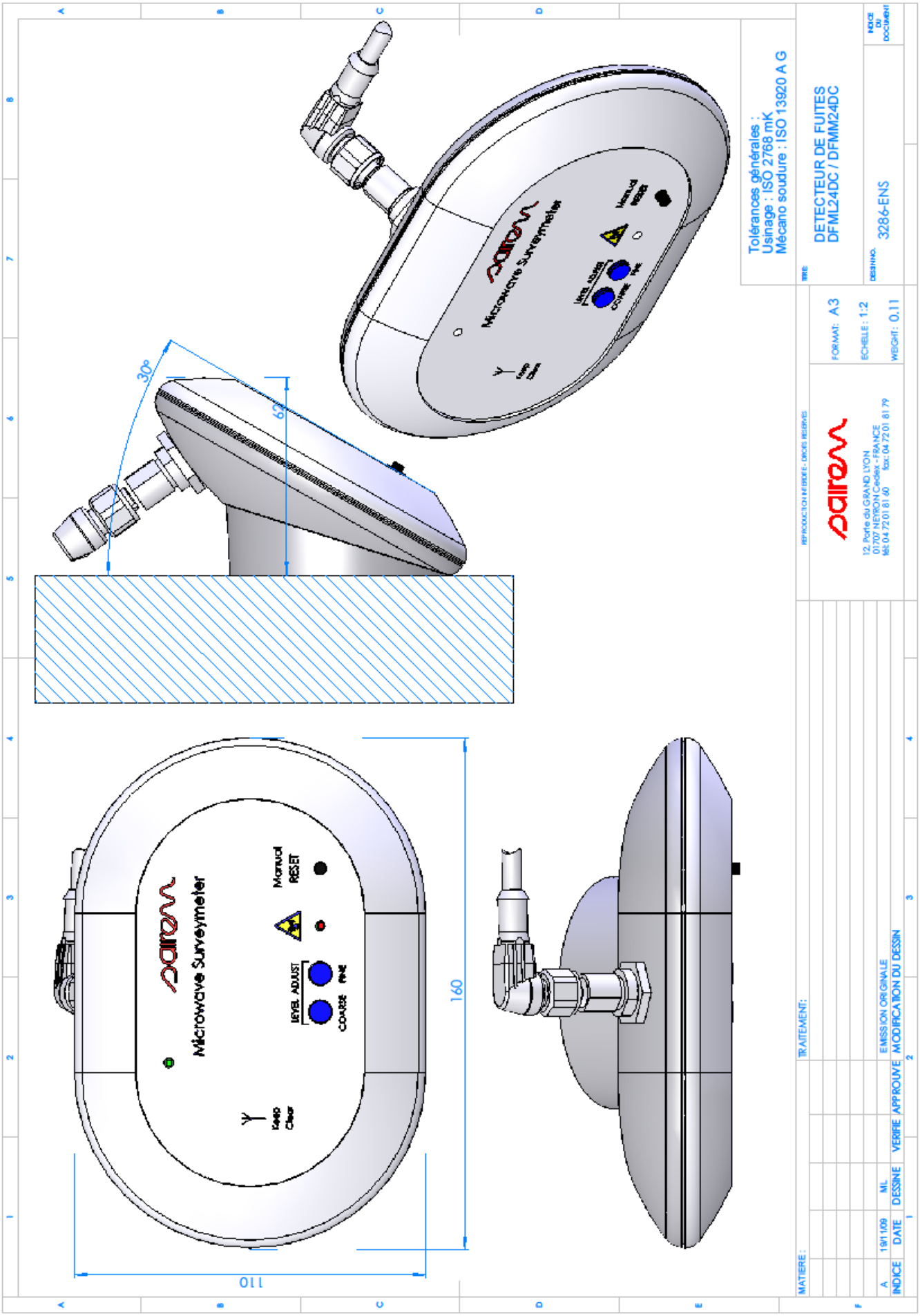


**12 porte du Grand Lyon, 01702 Neyron Cedex, France, www.sairem.com**
**Tel : +33 (0)4 72 01 81 60, Fax : +33 (0)4 72 01 81 79, E-mail : commercial@sairem.com**

2 TROUS diametre 4 POUR FIXATION DU SOCLE

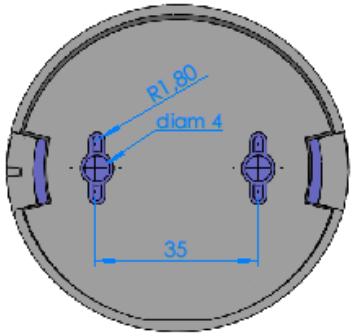


PRINCIPE DE MONTAGE ET VERROUILLAGE DU BOITIER

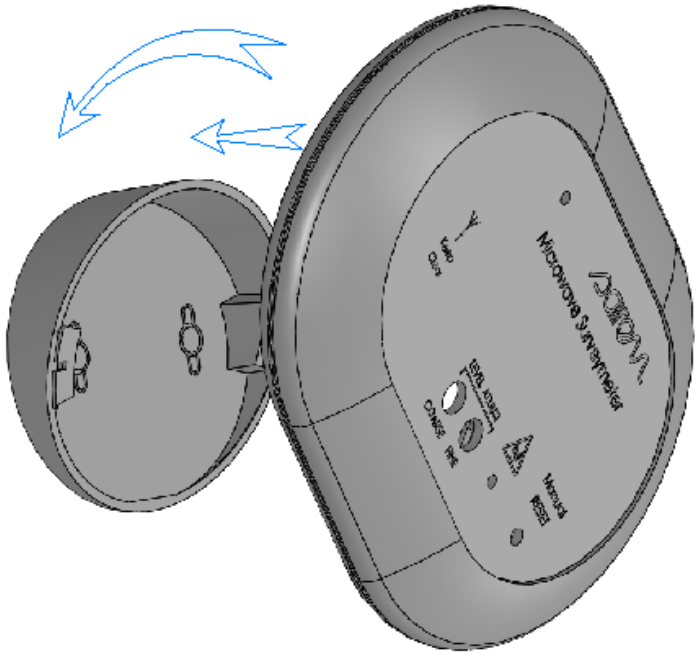


Tolérances générales :
Usinage : ISO 2768 mK
Mécano soudure : ISO 13920 A G

| MATIERE : | | | | | TRAITEMENT: |
|---|---|---|---|---|---|
| | | | | | |
| | | | | | |
| | | | | | |
| | | | | | |
| A | 03/03/10 | ML | | | EMISSION ORIGINALE |
| INDICE | DATE | DESSINE | VERIFIE | APPROUVE | MODIFICATION DU DESSIN |

REPRODUCTION INTERDITE - DROITS RESERVES

sairem
12, Porte du GRAND LYON
01707 NEYRON Cedex - FRANCE
tél: 04 72 01 81 60 fax: 04 72 01 81 79

FORMAT: A3
ECHELLE : 1:2
WEIGHT :

TITRE:
MODE DE FIXATION
DU BOITIER DFM

DESSIN NO. 3286-COM 2

INDICE DU DOCUMENT

12 porte du Grand Lyon, 01702 Neyron Cedex, France, www.sairem.com
Tel : +33 (0)4 72 01 81 60, Fax : +33 (0)4 72 01 81 79, E-mail : commercial@sairem.com